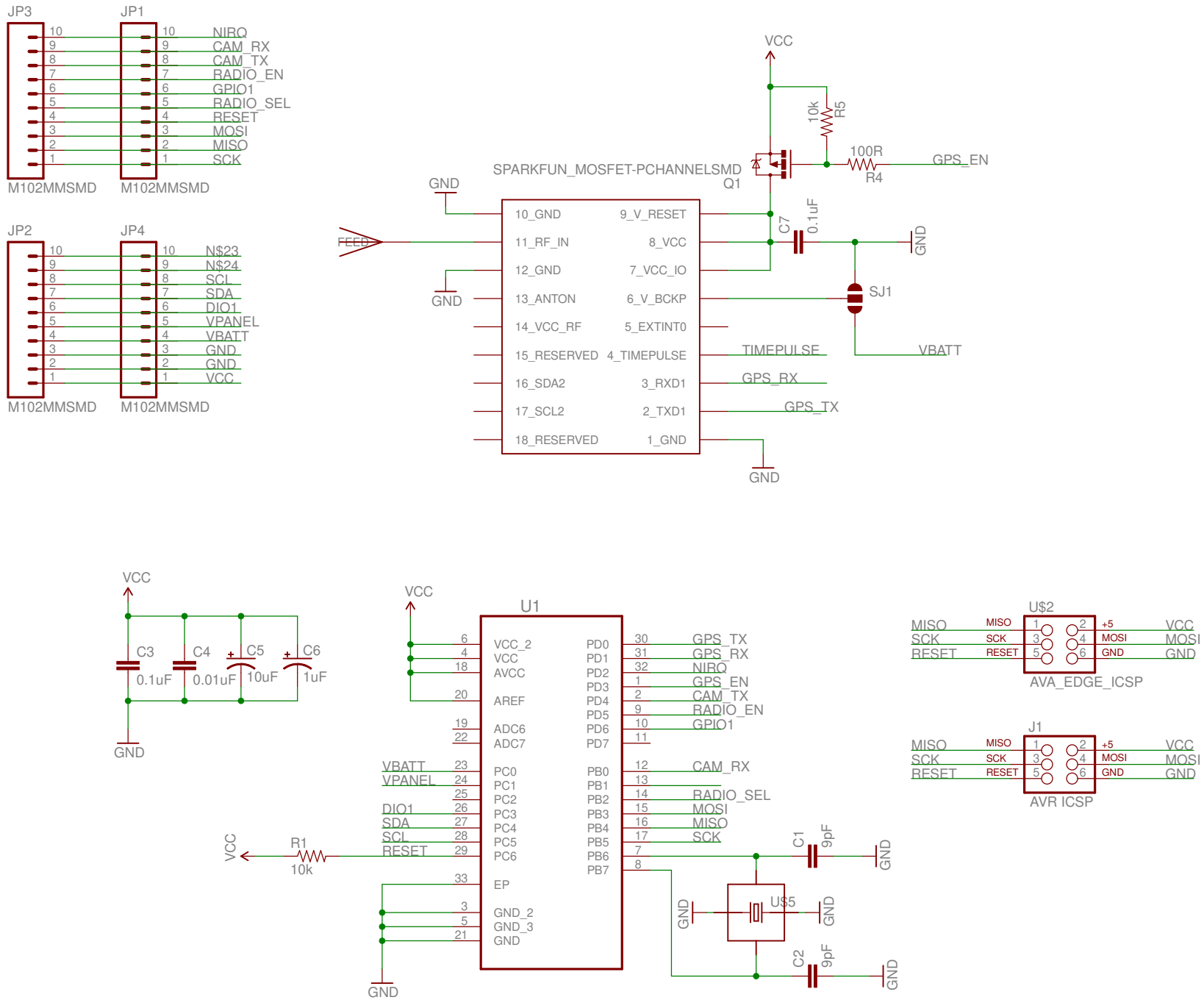
JP3
JP1
NIRQ
CAM_RX
CAM_TX
RADIO_EN
GPIO1
RADIO_SEL
RESET
MOSI
MISO
SCK
M102MMSMD
M102MMSMD
JP2
JP4
N$23
N$24
SCL
SDA
DIO1
VPANEL
VBATT
GND
GND
VCC
M102MMSMD
M102MMSMD
VCC
10k
R5
100R
R4
GPS_EN
SPARKFUN_MOSFET-PCHANNELSMD
Q1
GND
FEED
10_GND
11_RF_IN
12_GND
13_ANTON
14_VCC_RF
15_RESERVED
16_SDA2
17_SCL2
18_RESERVED
9_V_RESET
8_VCC
7_VCC_IO
6_V_BCKP
5_EXTINT0
4_TIMEPULSE
3_RXD1
2_TXD1
1_GND
C7
0.1uF
GND
SJ1
VBATT
TIMEPULSE
GPS_RX
GPS_TX
GND
VCC
C3
0.1uF
C4
0.01uF
C5
10uF
C6
1uF
GND
VCC
U1
VCC_2
VCC
AVCC
AREF
ADC6
ADC7
PC0
PC1
PC2
PC3
PC4
PC5
PC6
EP
GND_2
GND_3
GND
PD0
PD1
PD2
PD3
PD4
PD5
PD6
PD7
PB0
PB1
PB2
PB3
PB4
PB5
PB6
PB7
GPS_TX
GPS_RX
NIRQ
GPS_EN
CAM_TX
RADIO_EN
GPIO1
CAM_RX
RADIO_SEL
MOSI
MISO
SCK
VBATT
VPANEL
DIO1
SDA
SCL
RESET
VCC
R1
10k
C1
9pF
C2
9pF
US5
GND
U$2
MISO
SCK
RESET
+5
MOSI
GND
VCC
AVA_EDGE_ICSP
J1
AVR ICSP